700VCP-23 OVERALL SIZE

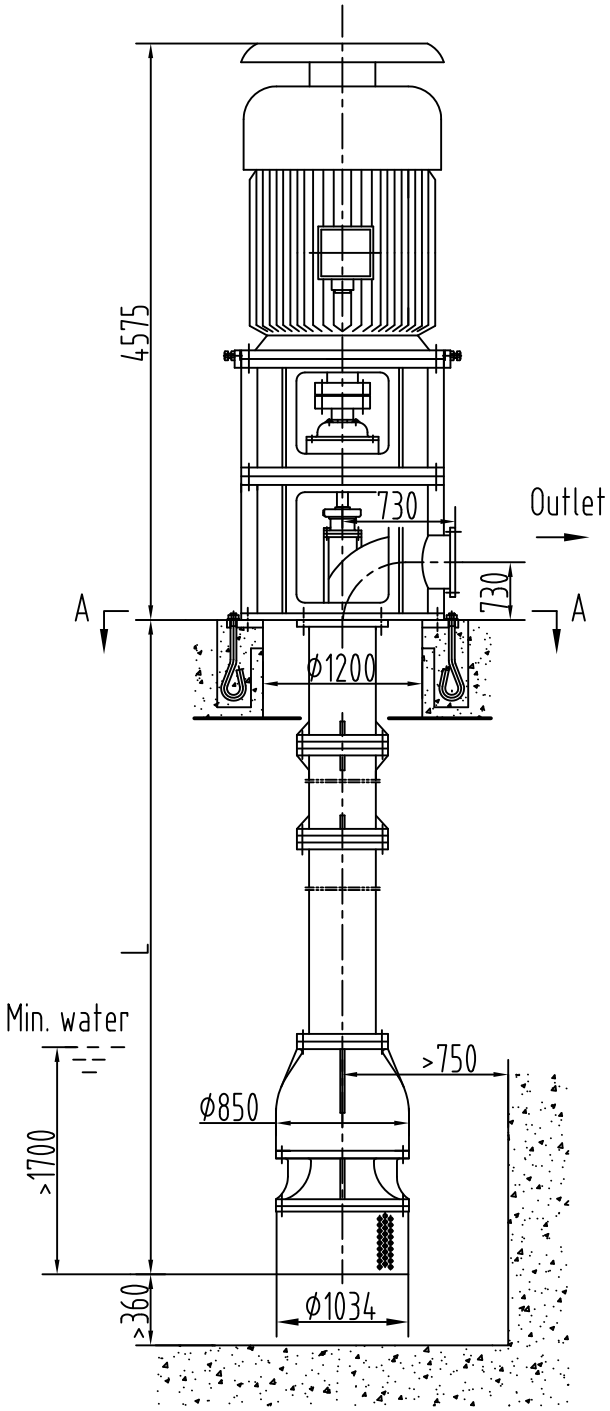

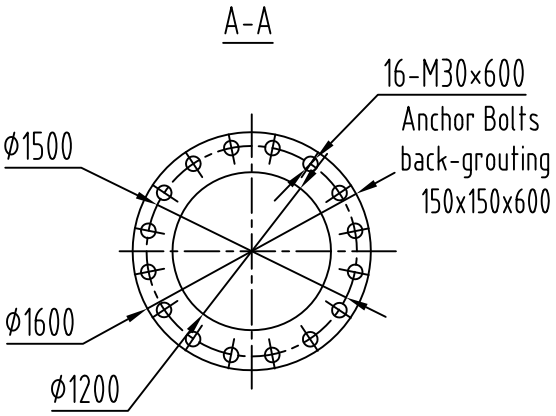

Outlet Flange (0.6Mpa)

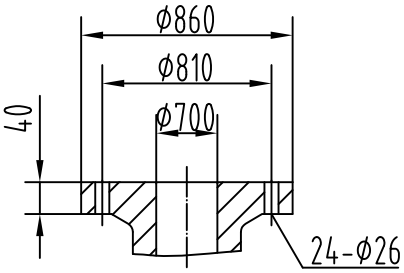

Main Parameters

Pump		Motor	
Capacity	4151m³/h	Type	YL450-6
Head	23.9m	Power	400KW
Eff.	84%	Speed	980r/min
Shaft P.	321.8kW	Voltage	10KV
Pump Wt.	5.8t	Motor Wt.	
Max.lifting height: 5.5m		Static loading weight:	
Max.lifting weight:5.3t		Dynamic loading weight:	
Long shaft bearing lubrication: self-water			
Rotation: viewed from driver end is CCW.			

Unit: mm

Type	700VCP-23	Design	Z.D
Remarks		Check	

For information only

21.03.2019

HUNAN CREDO PUMP CO.,LTD