700VCP-10 OVERALL SIZE

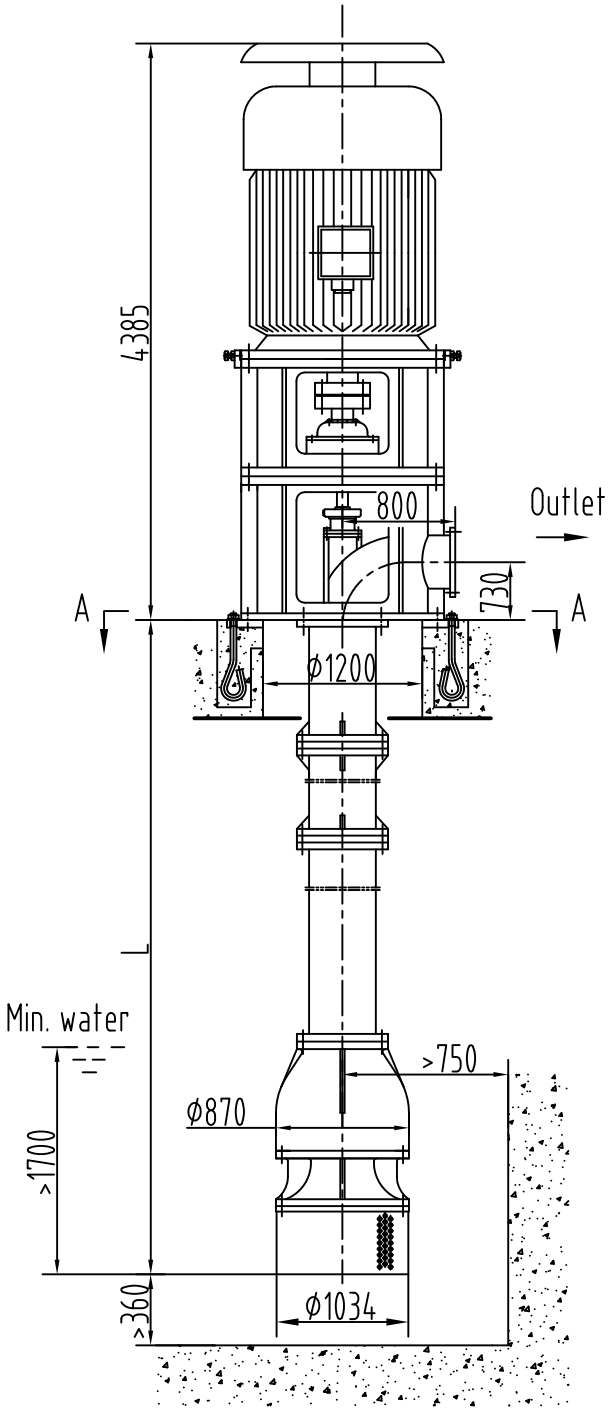

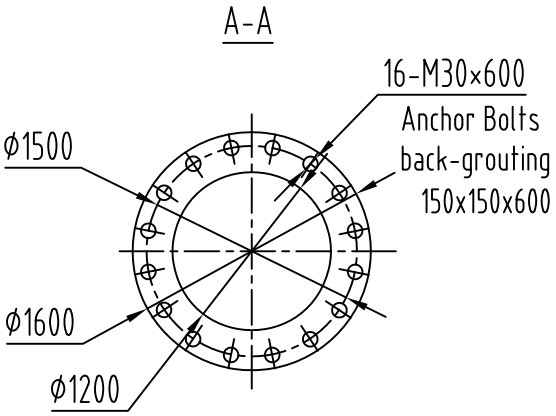

Outlet Flange (0.6Mpa)

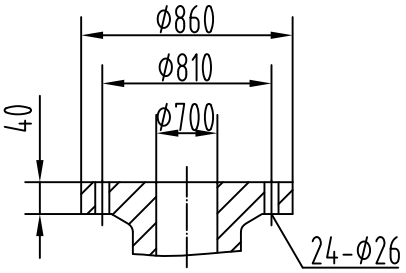

Main Parameters

Pump		Motor	
Capacity	4000m³/h	Type	YL500-8
Head	10.8m	Power	185kW
Eff.	83.8	Speed	740r/min
Shaft P.	141.0kW	Voltage	10KV
Pump Wt.	6.5t	Motor Wt.	
Max.lifting height: 5m		Static loading weight:	
Max.lifting weight:5.9t		Dynamic loading weight:	
Long shaft bearing lubrication: self-water			
Rotation: viewed from driver end is CCW.			

Unit: mm

Type	700VCP-10	Design	Z.D
Remarks		Check	

For information only

21.03.2019

HUNAN CREDO PUMP CO.,LTD