500VCP-10 OVERALL SIZE

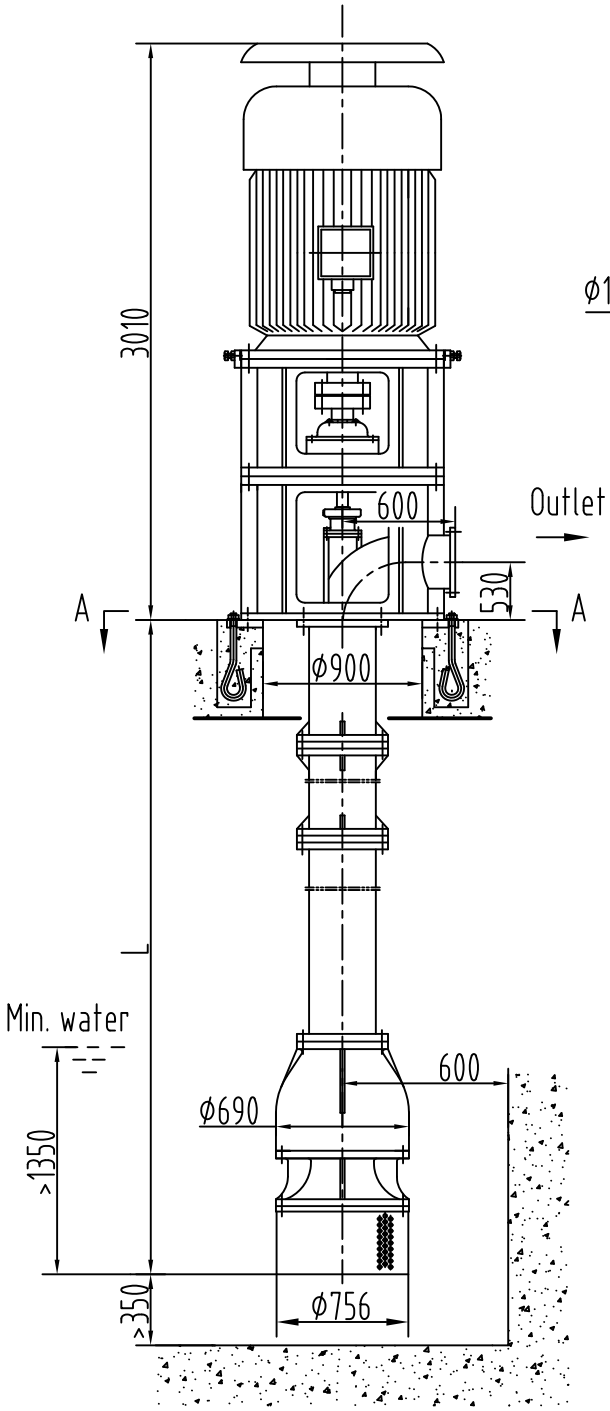

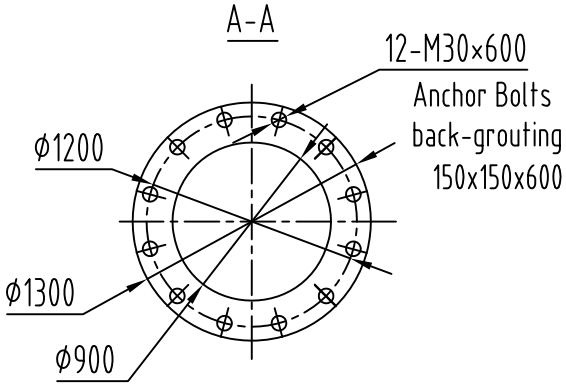

Outlet Flange (0.6Mpa)

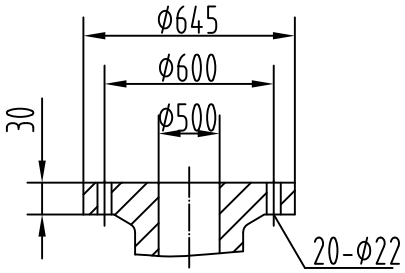

Main Parameters

Pump		Motor	
Capacity	2340m³/h	Type	Y315L-6
Head	10m	Power	110kW
Eff.	82.5%	Speed	980r/min
Shaft P.	77.3kW	Voltage	380V
Pump Wt.	3.4t	Motor Wt.	1.1t
Max.lifting height: 5.5m		Static loading weight:	
Max.lifting weight: 2.8t		Dynamic loading weight:	
Long shaft bearing lubrication: self-water			
Rotation: viewed from driver end is CCW.			

Unit: mm

Type	500VCP-10	Design	Z.D
Remarks		Check	

For information only

01.30.2018

HUNAN CREDO PUMP CO.,LTD