450VCP-34 OVERALL SIZE

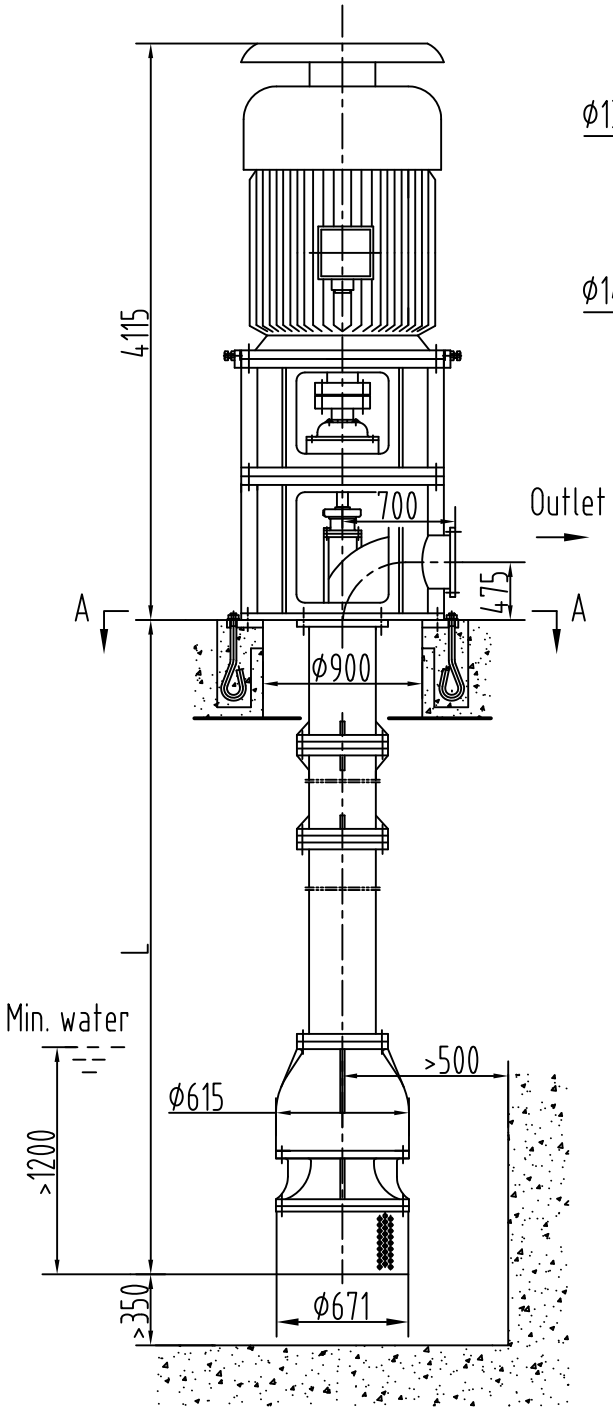

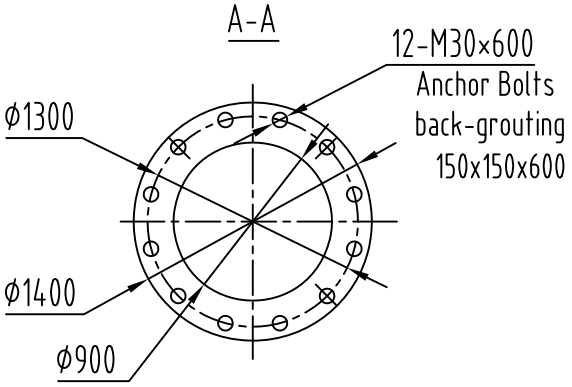

Outlet Flange (1.0Mpa)

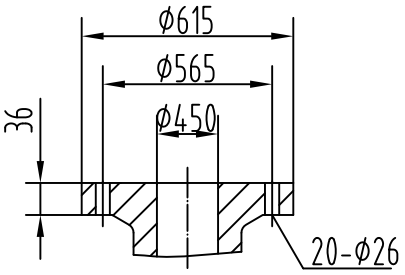

Main Parameters

Pump		Motor	
Capacity	1859m³/h	Type	YL450-4
Head	34.9m	Power	280kW
Eff.	82.5%	Speed	1480r/min
Shaft P.	214.3kW	Voltage	10KV
Pump Wt.	4.2t	Motor Wt.	
Max.lifting height: 5.5m		Static loading weight:	
Max.lifting weight:3.8t		Dynamic loading weight:	
Long shaft bearing lubrication: self-water			
Rotation: viewed from driver end is CCW.			

Unit: mm

Type	450VCP-34	Design	Z.D
Remarks		Check	

For information only

21.03.2019

HUNAN CREDO PUMP CO.,LTD