350VCP-52 OVERALL SIZE

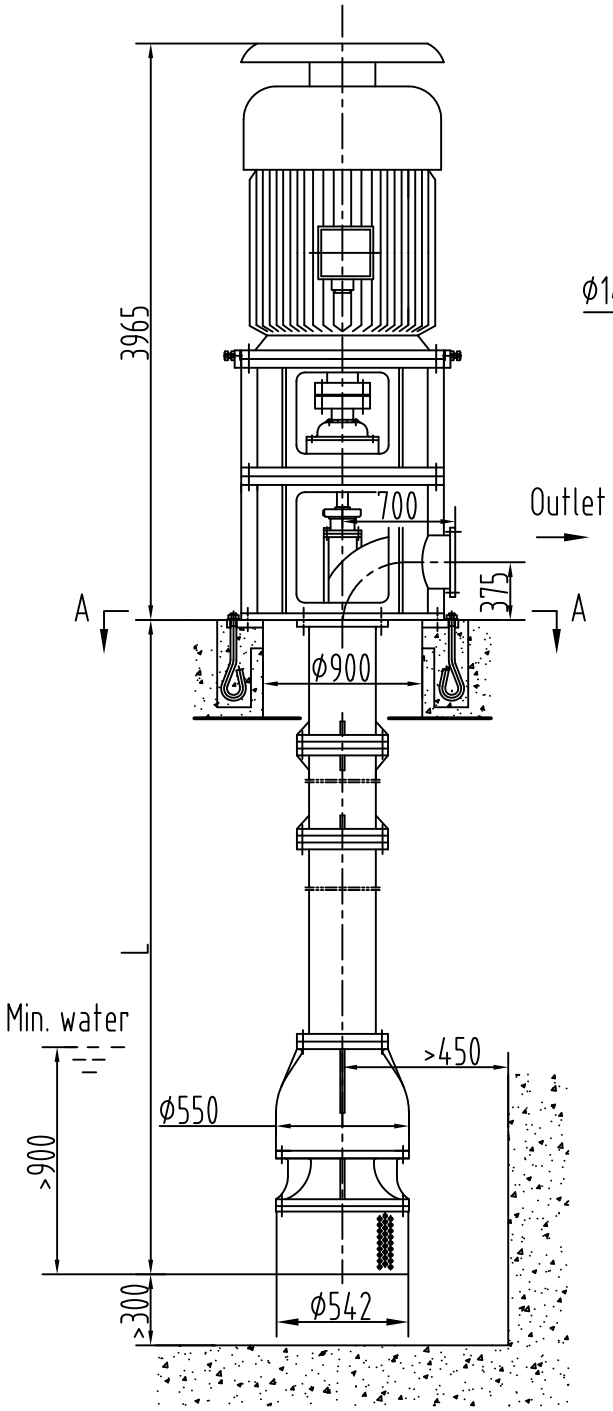

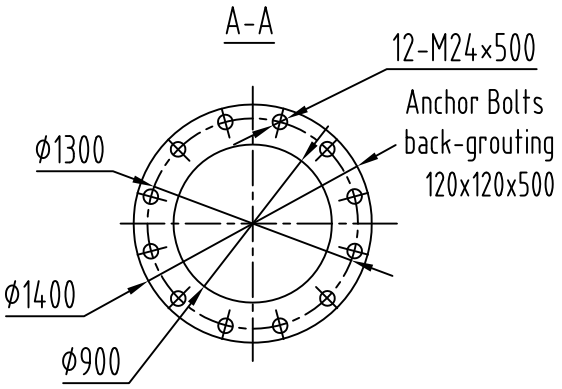

Outlet Flange (1.0Mpa)

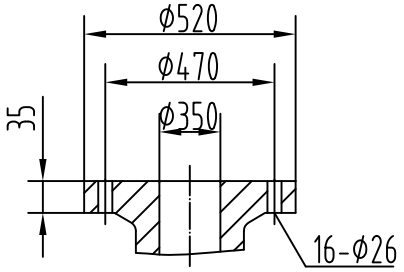

Main Parameters

Pump		Motor	
Capacity	1024 m^3/h	Type	YL450-4
Head	52m	Power	250kW
Eff.	80.5%	Speed	1480r/min
Shaft P.	180.2kW	Voltage	10kV
Pump Wt.	4.1t	Motor Wt.	3.3t
Max.lifting height: 4.5m		Static loading weight: 7.9t	
Max.lifting weight:3.5t		Dynamic loading weight: 9.5t	
Long shaft bearing lubrication: self-water			
Rotation: viewed from driver end is CCW.			

Unit: mm

Type	350VCP-52	Design	Z.D
Remarks		Chkd	X.J

For information only

01.30.2018

HUNAN CREDO PUMP CO.,LTD