300VCP-65 OVERALL SIZE

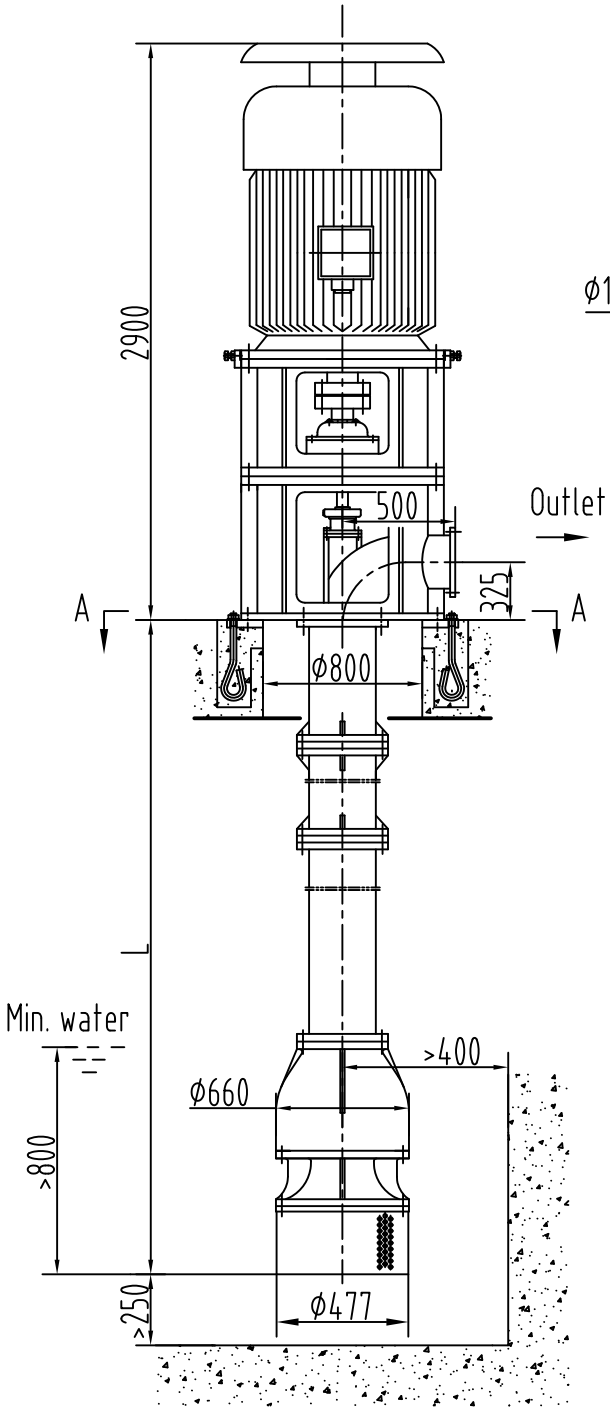

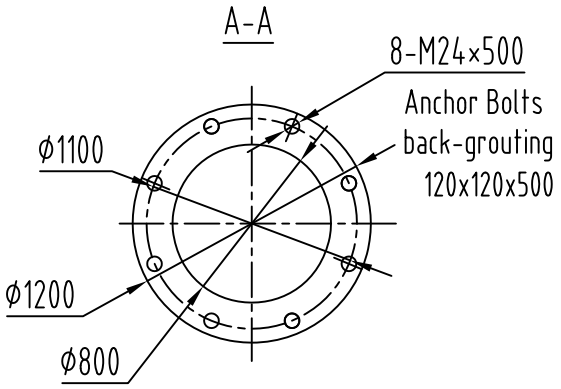

Outlet Flange (1.0Mpa)

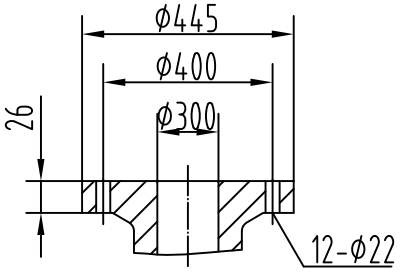

Main Parameters

Pump		Motor	
Capacity	752 m^3/h	Type	Y355M-4
Head	65.9m	Power	220kW
Eff.	79%	Speed	1480r/min
Shaft P.	170.9kW	Voltage	380V
Pump Wt.	2.7t	Motor Wt.	1.35t
Max.lifting height: 4.5m		Static loading weight: 4.4t	
Max.lifting weight: 2.3t		Dynamic loading weight: 5.3t	
Long shaft bearing lubrication: self-water			
Rotation: viewed from driver end is CCW.			

Unit: mm

Type	300VCP-65	Design	Z.D
Remarks		Chkd	X.J

For information only

01.30.2018

HUNAN CREDO PUMP CO.,LTD