250VCP-15 OVERALL SIZE

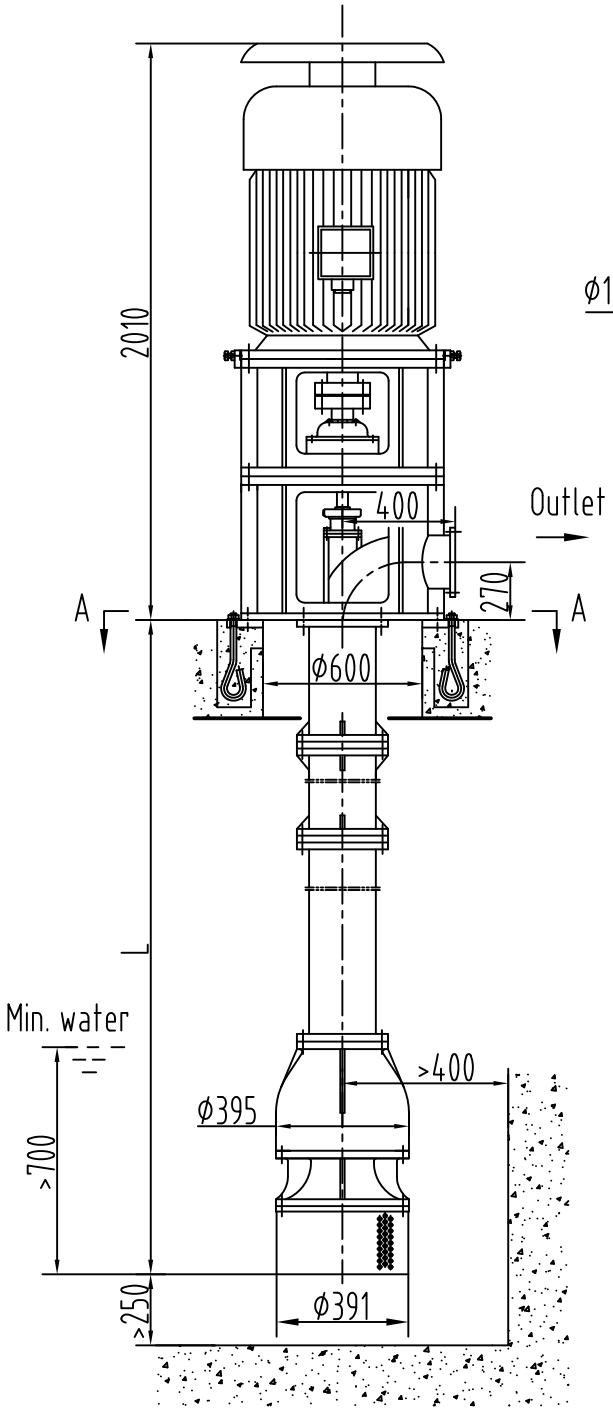

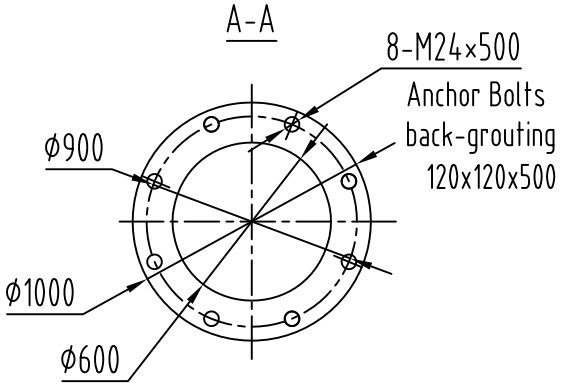

Outlet Flange (1.0Mpa)

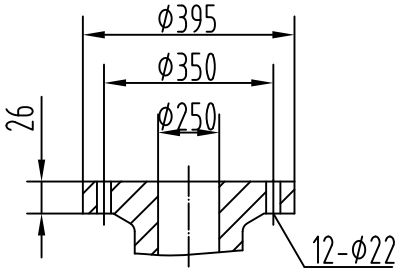

Main Parameters

Pump		Motor	
Capacity	522 m^3/h	Type	Y225S-4
Head	15m	Power	37kW
Eff.	79%	Speed	1480r/min
Shaft P.	26.9kW	Voltage	380V
Pump Wt.	1.6t	Motor Wt.	0.3t
Max.lifting height: 4.5m		Static loading weight: 2.2t	
Max.lifting weight:1.3t		Dynamic loading weight: 2.6t	
Long shaft bearing lubrication: self-water			
Rotation: viewed from driver end is CCW.			

Unit: mm

Type	250VCP-15	Design	Z.D
Remarks		Chkd	X.J

For information only

01.30.2018

HUNAN CREDO PUMP CO.,LTD