150VCP-26X4 OVERALL SIZE

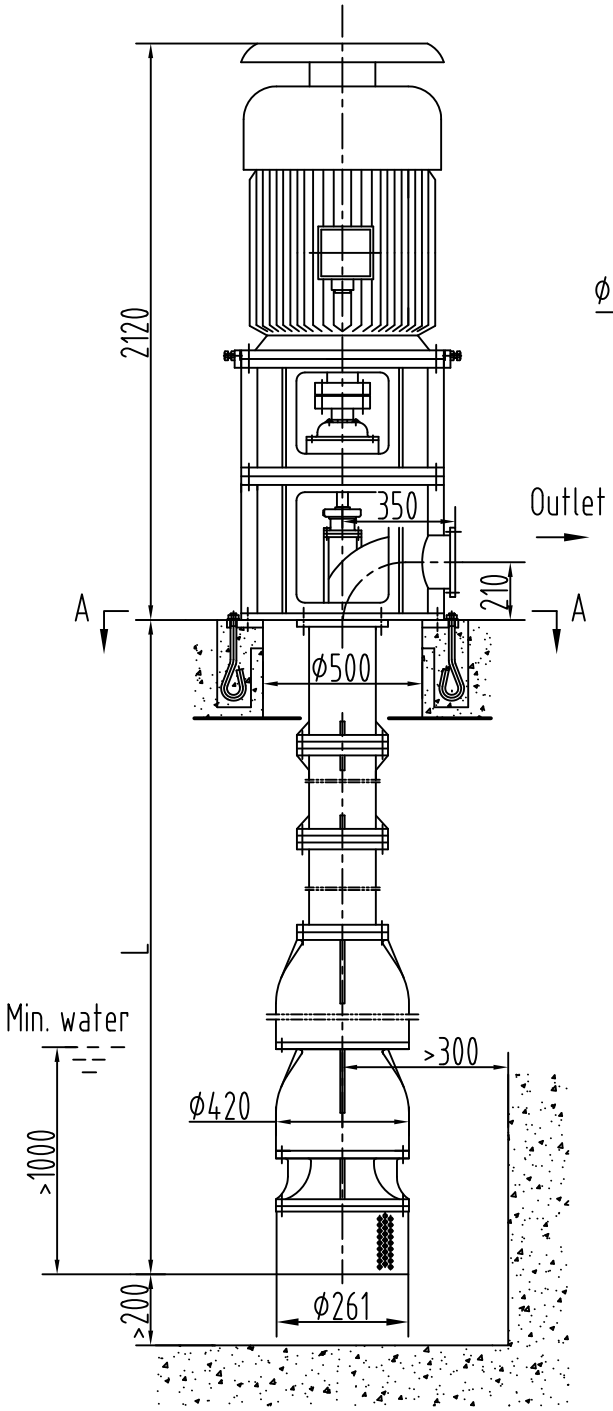

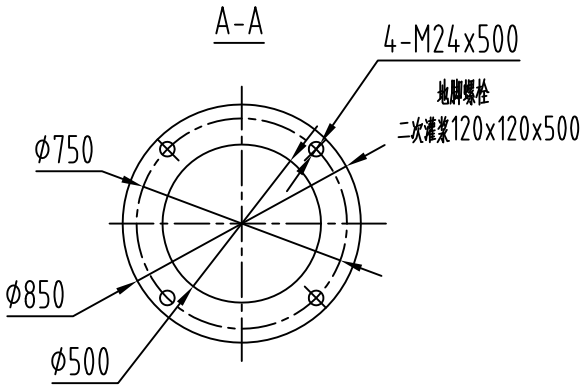

Outlet Flange (2.5Mpa)

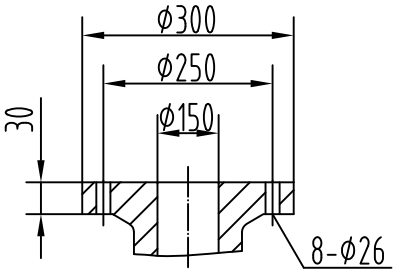

Main Parameters

Pump		Motor	
Capacity	187 m^3/h	Type	YE2-280M-4
Head	104m	Power	90KW
Eff.	76%	Speed	1480r/min
Shaft P.	69.9KW	Voltage	380V
Pump Wt.	1.9t	Motor Wt.	0.65t
Max.lifting height: 4.5m		Static loading weight: 2.9t	
Max.lifting weight:1.6t		Dynamic loading weight: 3.5t	
Long shaft bearing lubrication: self-water			
Rotation: viewed from driver end is CCW.			

Unit: mm

Type	150VCP-26X4	Design	Z.D
Remarks		Chkd	X.J

For information only

01.30.2018

HUNAN CREDO PUMP CO.,LTD