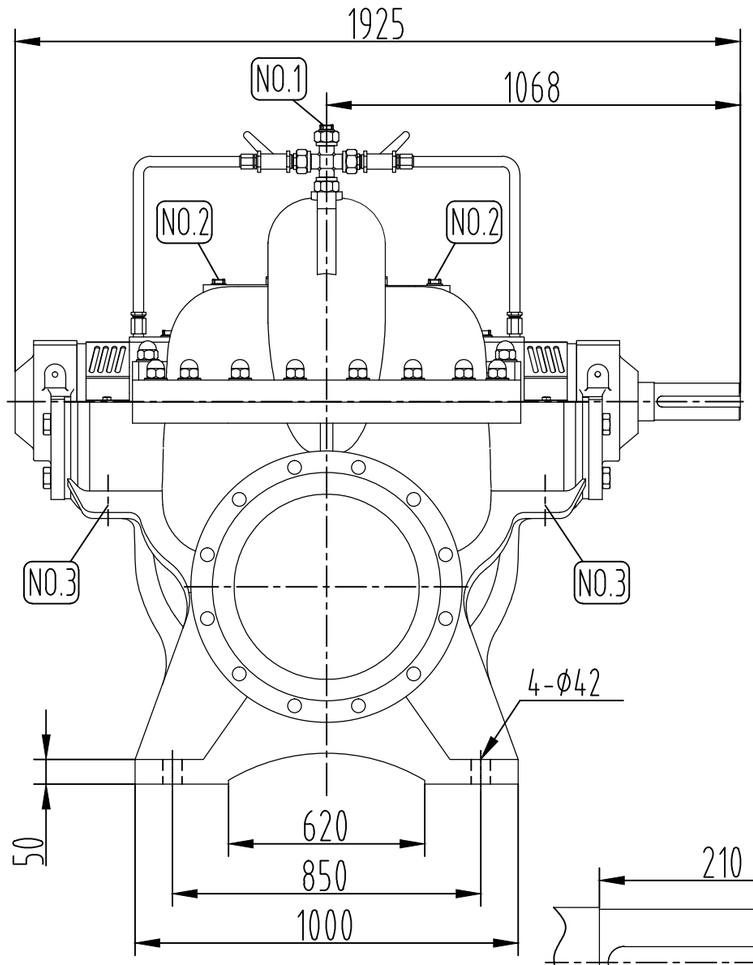


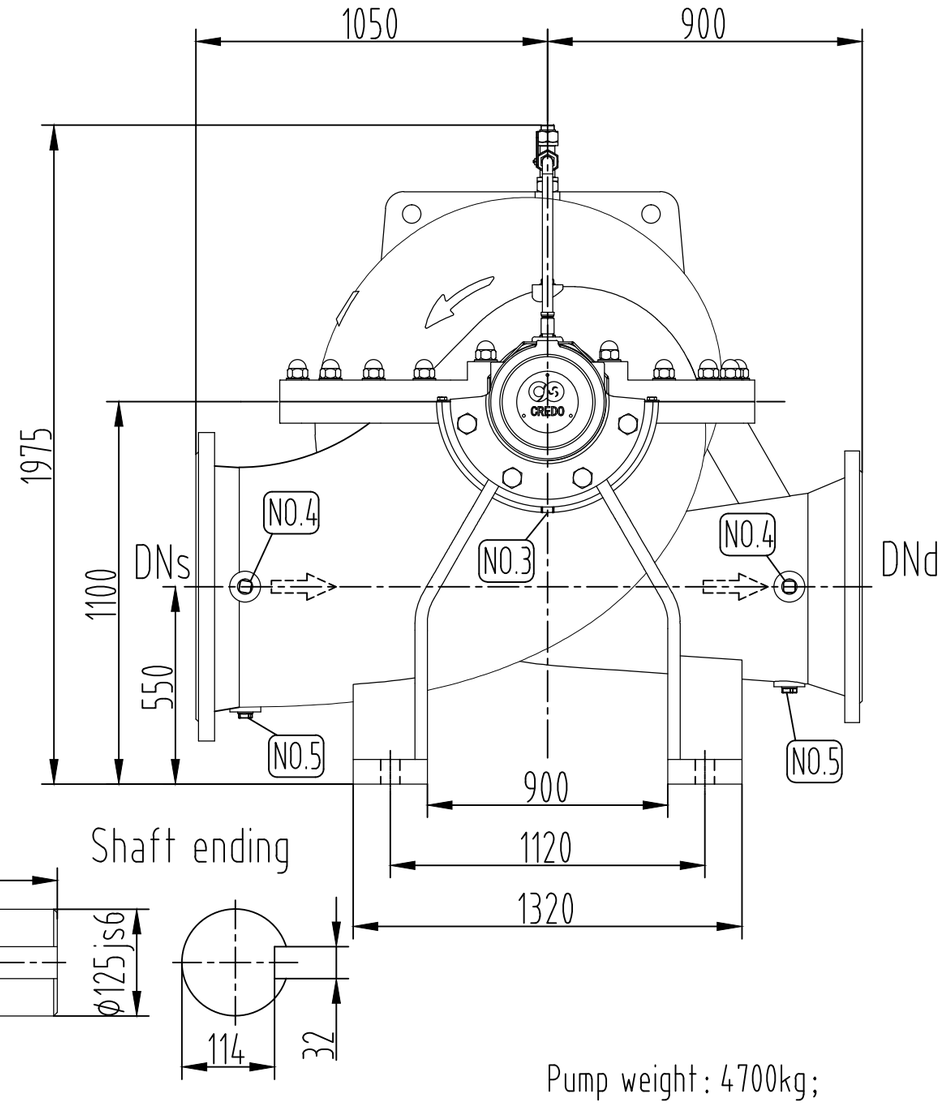


| interface table | | | |
|---|---|---|---|
| No. | Item | Size | Qty |
| NO.1 | Vent | Rp 1 | 1 |
| NO.2 | Vent | Rp1/2 | 2 |
| NO.3 | Drain | Rp1/2 | 2 |
| NO.4 | P.gauge | Rp1/2 | 4 |
| NO.5 | Drain | Rp 1 | 2 |

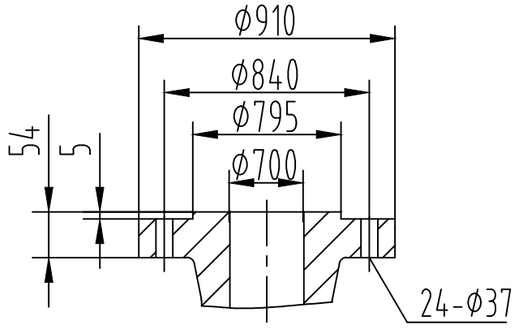


inlet flange GB/T17241.6 1.6MPa

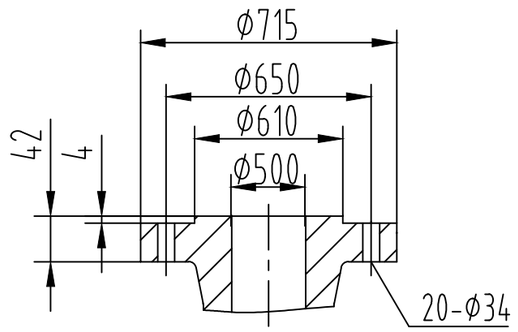


outlet flange GB/T17241.6 1.6MPa

Pump weight: 4700kg;
Rotation: Viewed from driver end is CW.

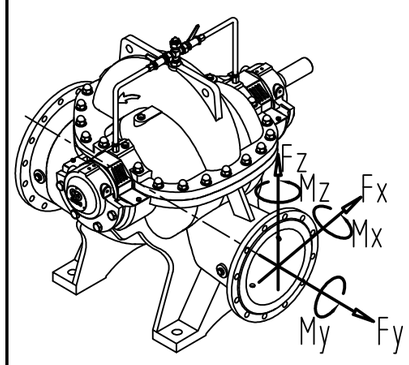


| | DN | Force(N) | | | Moment(N.m) | | |
|---|---|---|---|---|---|---|---|
| Inet DNs | mm | Fx | Fy | Fz | Mx | My | Mz |
| | 700 | 10700 | 10700 | 10700 | 7100 | 7100 | 7100 |

| | DN | Force(N) | | | Moment(N.m) | | |
|---|---|---|---|---|---|---|---|
| Outlet DNd | mm | Fx | Fy | Fz | Mx | My | Mz |
| | 500 | 8800 | 8800 | 8800 | 4900 | 4900 | 4900 |

| | | | | | |
|---|---|---|---|---|---|
| Designer | | Date | | Version | |
| Checker | | Date | | Notes | |
| Approver | | Date | | | |

CREDO HUNAN CREDO PUMP CO., LTD

**Outline drawing**

CPS700-920