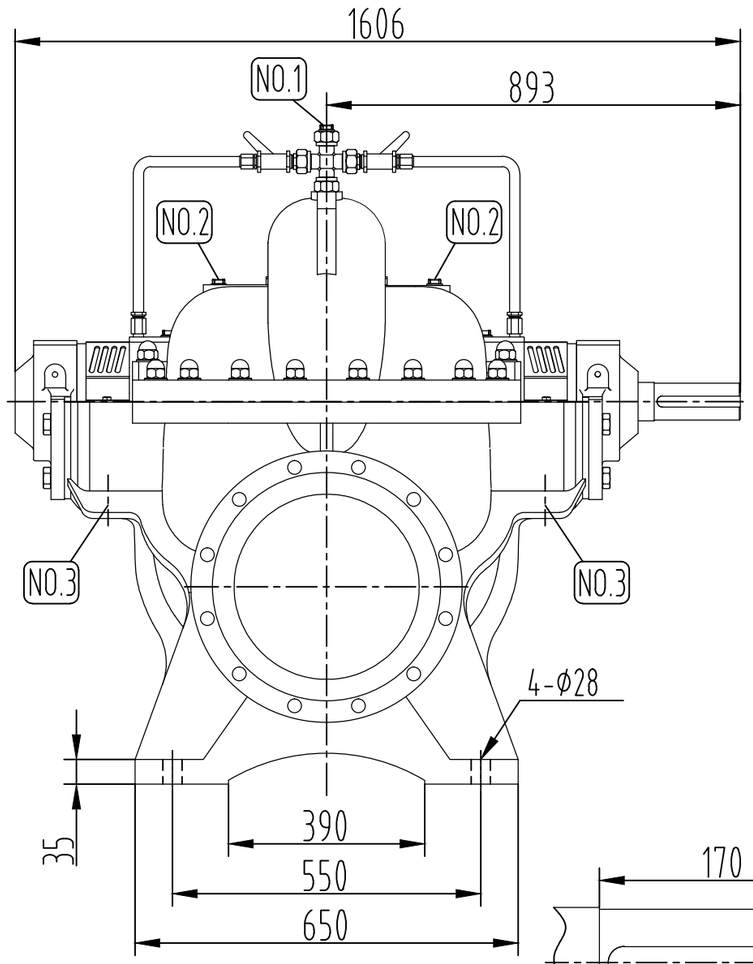

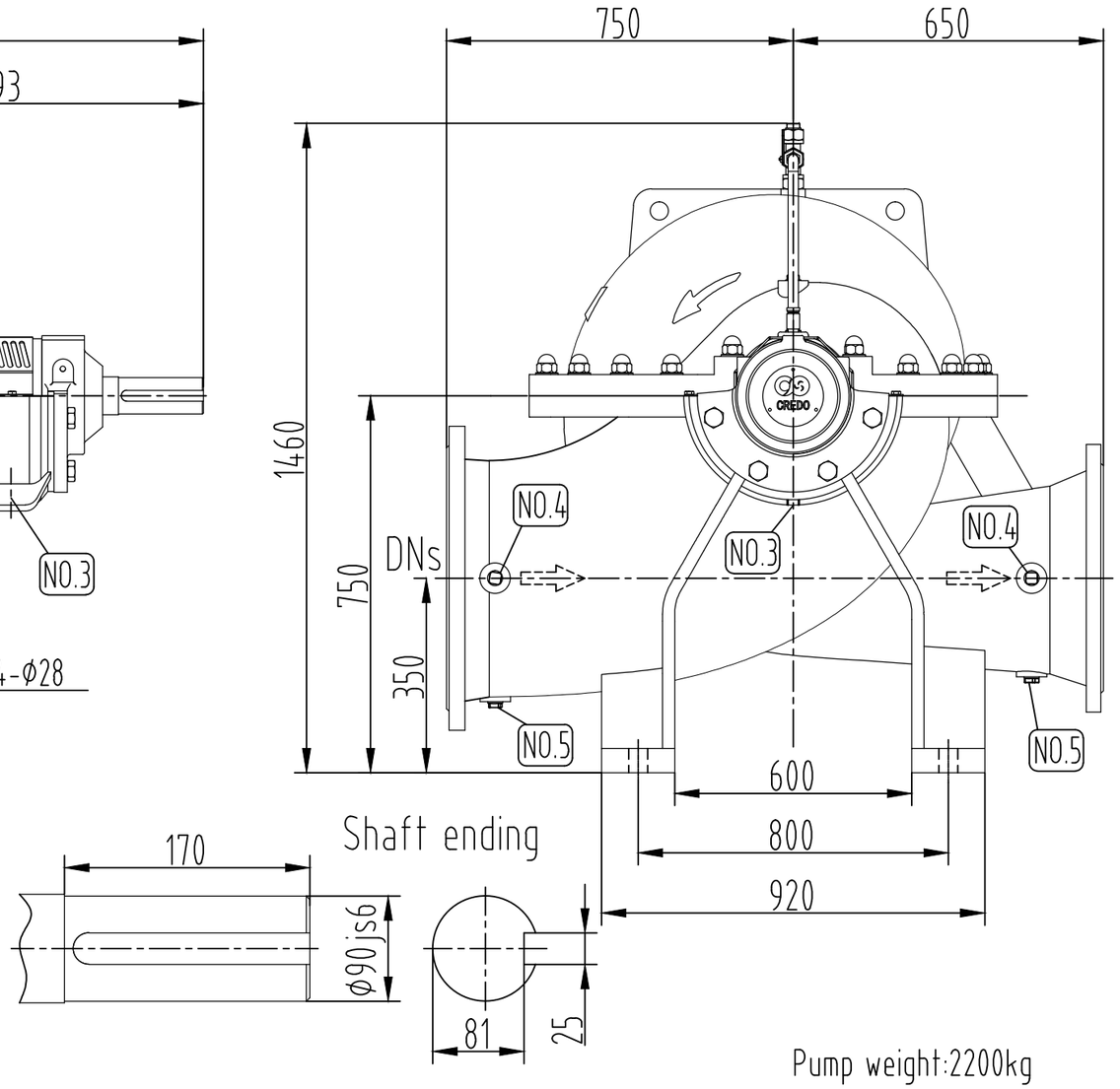

Connection table			
No.	Item	Size	Qty
NO.1	Vent	Rp1/2	1
NO.2	Vent	Rp1/2	2
NO.3	Leakage	Rp1/2	2
NO.4	P.gauge	Rp1/2	4
NO.5	Drain	Rp1/2	2

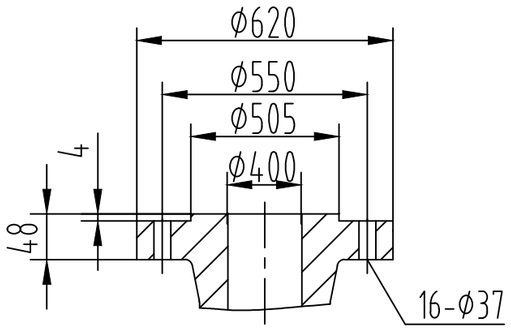

Inlet flange GB/T17241.6 2.5MPa

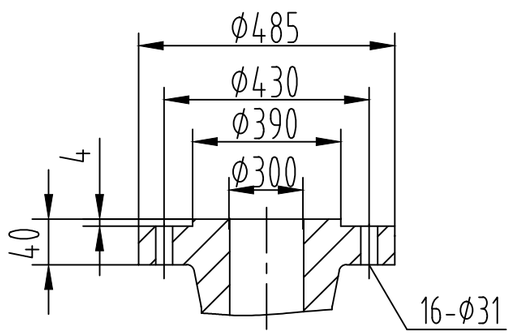

Pump weight:2200kg

Rotation: Viewed from driver end is CW.

Outlet flange GB/T17241.6 2.5MPa

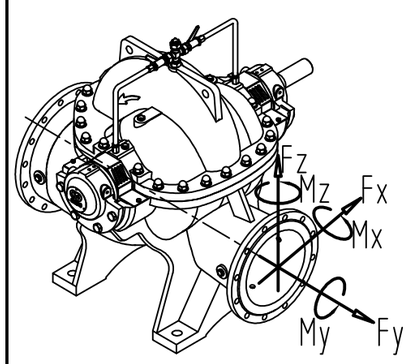

	DN	Force(N)			Moment(N.m)		
Inlet DNs	mm	Fx	Fy	Fz	Mx	My	Mz
	400	6900	6900	6900	3800	3800	3800

	DN	Force(N)			MomentN.m)		
Outlet DNd	mm	Fx	Fy	Fz	Mx	My	Mz
	300	9700	9700	9700	5300	5300	5300

Designer		Date		Version	
Checker		Date		Notes	
Approver		Date			

CREDO HUNAN CREDO PUMP CO.,LTD

Outline drawing

CPS400-700